VALVE HEAD I40 TYPE N PTFE

ART. NO. 315544

GENERAL

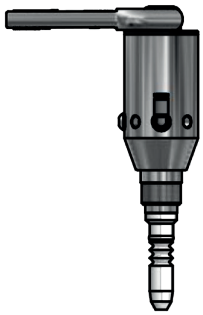

The KEOFITT CLASSIC "INGOLD" Sampling Valve owes its hygienic design and one-piece construction to the original KEOFITT valve. Unique serial no. for each valve*.

The sampling valve can be used for any process sampling for microbiological, chemical and/or physical analysis.

Cleaning/sterilizing: Between batches: Valve in open position: Cleanable by means of CIP using the detergent solution suitable for the actual process media. Between samples: Valve in its normal closed position: cleanable by CIP as "Between batches" or the valve may be sterilized by means of steam SIP or chemical SIP using a procedure appropriate to the actual circumstances. For further advice, please contact KEOFITT.
Autoclavable.

Designed for sampling of liquids with a viscosity of up to approx. 1.000 cP containing no particles larger than Ø2 mm. Sampling of more viscous liquids is possible, only will it take longer (depending on process pressure).

FEATURES

Installation: Threaded connection (I40)

Membrane: PTFE (#310055)

Operation: Pneumatically operated / Lever handle (#600170)
Spring closed - when not pressurized

CERTIFICATION*

Valve head:	EU EC 1935/2004 · EU EC 2023/2006 · EU EC 10/2011 · DK No 681 25/05/20 · ATEX 2014/34/EU · PED 2014/68/EU · FDA CFR 21 §177.2600 · USP Class VI · Keofitt DoC.
Membrane:	EU EC 1935/2004 · EU EC 2023/2006 · EU EC 10/2011 · DK No 681 25/05/20 · FDA CFR 21 §177.1550 · USP Class VI · ADI Free · Keofitt DoC.

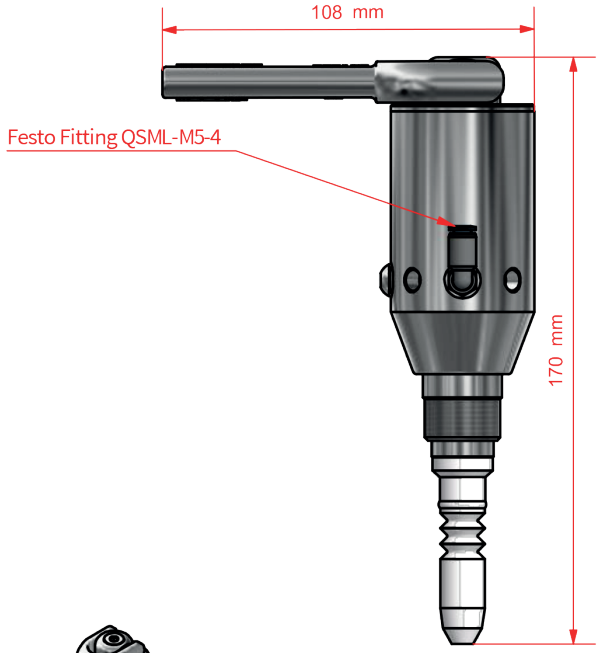

TECHNICAL DATA

Material (process contact)

Membrane:	PTFE, white (#310055)

Material (without process contact)

Steel parts:	AISI 303 (1.4305) / AISI 316L (1.4404)
Lever handle:	AISI 316L (1.4404)

Pressure & Temperature

Pressure:	0 -10 bar / 0 - 145 psi
Temperature:	1 - 150°C / 34 - 302°F
Air supply:	4 - 7 bar / 58 - 101 psi

Net weight

Kg/lbs:	0.891 kg / 1.963 lbs

SPARE PARTS

# 773144PTFE	Parts for I40 valve head #315544

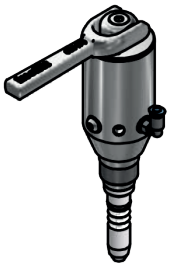

*For further information and downloads please visit www.keofitt.dk

KEOFITT A/S reserves the right to change technical data without notice! Valid version of the data sheet is available on www.keofitt.dk

Updated 24-01-2024