SESAME HEAD I52 MM TYPE N

ART. NO. 893244PTFE

GENERAL

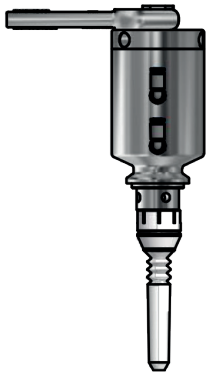

The KEOFITT SESAME "INGOLD" Sampling Valve is part of our patented dual-seat sampling valve. Unique in the market, it eliminates dead-leg during sampling while incorporating steam supply control. Unique serial no. for each valve*.

The sampling valve can be used for any process sampling for microbiological, chemical and/or physical analysis.

Cleaning/sterilizing: Between batches: Valve in open position: Cleanable by means of CIP using the detergent solution suitable for the actual process media. Between samples: Valve in its normal closed position: cleanable by CIP as "Between batches" or the valve may be sterilized by means of steam SIP or chemical SIP using a procedure appropriate to the actual circumstances. For further advice, please contact KEOFITT.
Autoclavable.

Designed for sampling of liquids with a viscosity of up to approx. 1.000 cP containing no particles larger than Ø2 mm.
Sampling of more viscous liquids is possible, only will it take longer (depending on process pressure).

FEATURES

Installation: Clamp connection (clamp ring included #900189)

Membrane: PTFE (#895532)

Operation: Pneumatically operated/ Lever handle (#600170)
Spring closed - when not pressurized.

CERTIFICATION*

Valve head:	EU EC 1935/2004 · EU EC 2023/2006 · EU EC 10/2011 · DK No 681 25/05/20 · ATEX 2014/34/EU · PED 2014/68/EU · FDA CFR 21 §177.2600 · USP Class VI · KEOFITT DoC
Membrane:	EU EC 1935/2004 · EU EC 2023/2006 · DK No 681 25/05/20 · FDA CFR 21 §177.1500 · USP Class VI · ADI Free · KEOFITT DoC
O-ring:	EU EC 1935/2004 · EU EC 2023/2006 · DK No 681 25/05/20· FDA CFR 21 §177.2600 · USP Class VI · REACH · RoHS · ADI Free

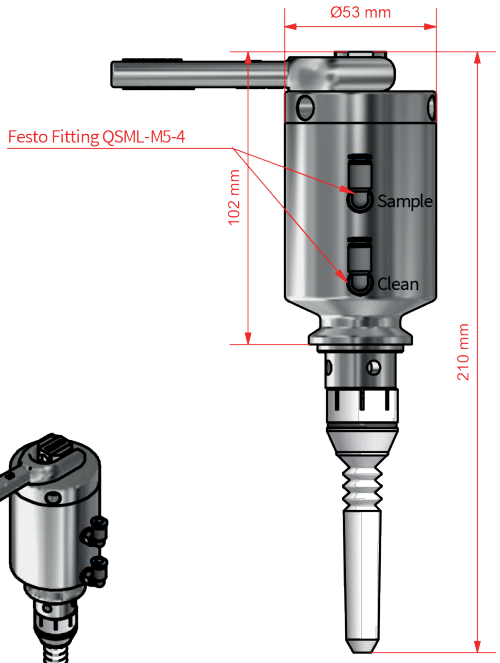

TECHNICAL DATA

Material (process contact)

Membrane:	PTFE, White (#895532)

Material (without process contact)

Steel parts:	AISI 316L (1.4404)
Lever handle:	AISI 316L (1.4404)
O-ring:	EPDM, Black (#880830)

Pressure & Temperature

Pressure:	0 - 10 bar / 0 - 145 psi (Process & CIP/SIP)
Temperature:	1 - 150°C / 34 - 302°F
Air supply:	4 - 7 bar / 58 - 101 psi

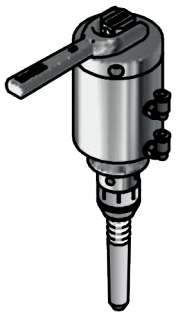

Net weight

Kg/lbs:	1.585 kg/3.491 lbs

SPARE PARTS

#895531	Membrane PTFE Sesame I40 mm
#880830	10 pack O-ring EPDM 20.35 x 1.78

*For further information and downloads please visit www.keofitt.dk

KEOFITT A/S reserves the right to change technical data without notice! Valid version of the data sheet is available on www.keofitt.dk